ITEM NO.	PART NUMBER	DESCRIPTION	QTY.
1	350147	BENCH 72", 204-SB	1

PRODUCT & PRICING INFO CONTACT

STREETSCAPES
STREETSCAPES.BIZ

Info@streetscapefurniture.com ■ 303.398.7040

MADE IN WAUSAU®
Wausau Tile

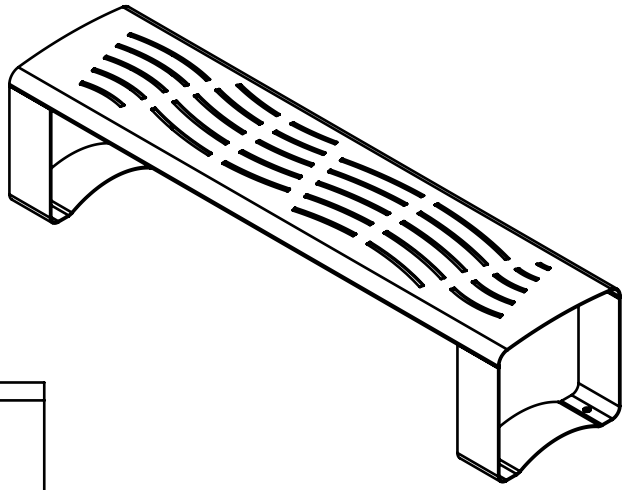

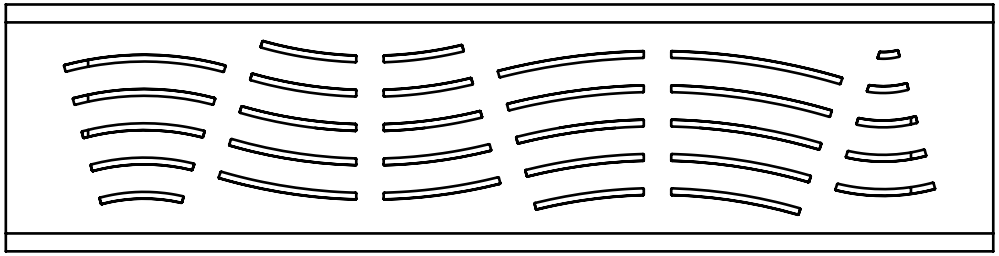

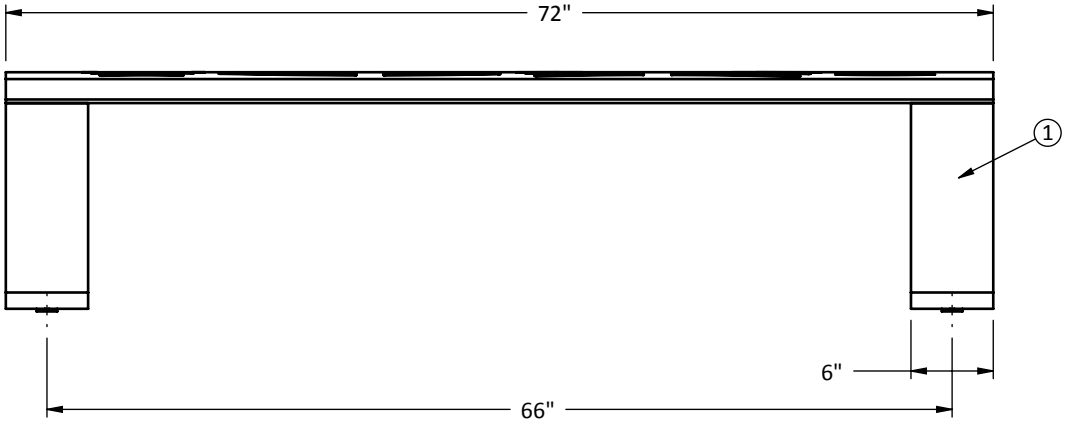

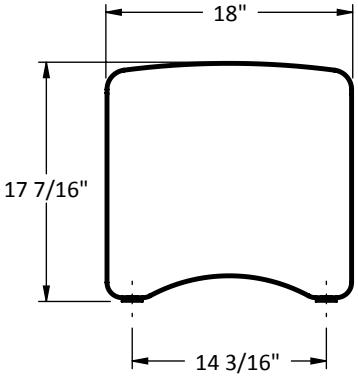

REVISIONS

	NAME	DATE	NOTES
1			
2			
3			
4			
5			
6			
7			
8			

CONFIDENTIAL INFORMATION

THESE DRAWINGS, SPECIFICATIONS AND OTHER INFORMATION AND DOCUMENTS ACCOMPANYING THEM ARE THE CONFIDENTIAL AND PROPRIETARY PROPERTY OF WAUSAU TILE, INC. THE DRAWINGS THEMSELVES SHALL BELONG TO THE OWNER FOR USE ONLY ON THE PROJECT. ANY ADDITIONAL USE SHALL REQUIRE THE PRIOR WRITTEN APPROVAL OF WAUSAU TILE, INC. THE PROPRIETARY INFORMATION CONTAINED WITHIN THE DRAWINGS AND THE DOCUMENTS IS AND SHALL REMAIN THE SOLE PROPERTY OF WAUSAU TILE, INC.

BENCH, 48"

UNLESS OTHERWISE SPECIFIED
DIMENSIONS ARE IN INCHES
TOLERANCE:
FRACTIONS ± 1/8" ANGLE ±0.5°
DIM: 2-PL ±0.01 3-PL ±.005

DRAWN BY: DLS 07-15-2016
DATE: 11/9/2017
MATERIAL:
CO NUMBER:
WEIGHT:
NUMBER: WS204-SB

STREETSCAPES
STREETSCAPES.BIZ
303.398.7040 ■ 1400 Sixteenth St., Suite 400 ■ Denver, Colorado 80202

SELECT BENCH PATTERNS

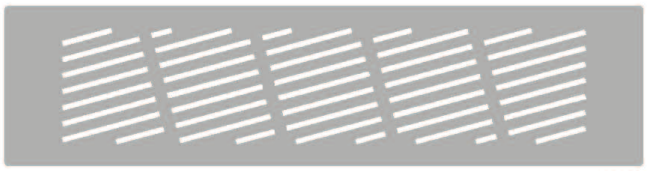

S-A

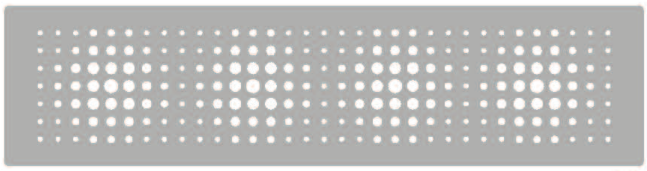

S-E

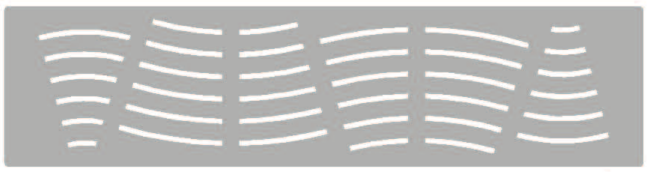

S-B

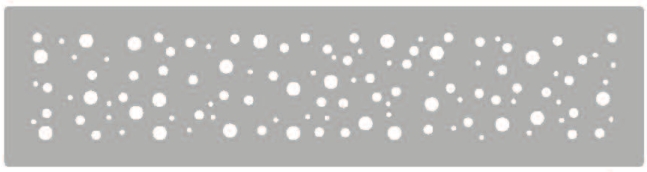

S-F

S-C

S-G

S-D

S-H